Nonlinear Model Predictive Control of a Four-Node District Heating Network

Author: Muhammad Kashif Sarwar
Supervisors: Rose Max, Alejandra Sandoval, Juan Machado
Date: April 29, 2026

Revision History

This section records the major revisions introduced after the baseline Version 1.0 of the report.

Version 1.1

- Converted the document from a preliminary modelling note into a full academic report.
- Added the main report structure, including title page, table of contents, list of figures, list of tables, chapters, and bibliography.
- Added the initial introduction, system modelling, NMPC formulation, simulation setup, results, and conclusion chapters.
- Replaced the original graph-theoretic presentation with a chapter-based modelling derivation.
- Added explicit definitions of states, manipulated variables, measured disturbance, initial operating point, nodal masses, heat-loss coefficients, and node-wise differential equations.
- Added the compact nonlinear matrix-form state model and interpretation of model terms.
- Added the initial MATLAB/Simulink NMPC implementation, synthetic daily demand profile, and closed-loop simulation results.
- Identified the first implemented controller as demand-following rather than temperature-tracking.

Version 1.2

- Revised title-page metadata to include author and supervisors.
- Removed the abstract and expanded the academic background, motivation, and literature support.
- Revised the system description, component identification, physical parameterization, and nominal density selection.

- Changed the initial temperature vector to

$$x(0) = \begin{bmatrix} 80 & 80 & 70 & 60 \end{bmatrix}^\top .$$

- Reorganized Chapter 3 into NMPC concept, prediction model, objective function, constraints, complete problem statement, MATLAB implementation, and formulation discussion.
- Added a mathematical expression for the synthetic daily heat-demand disturbance profile.
- Moved the Simulink implementation figure to the simulation chapter and revised the plant-subsystem description.
- Reorganized the results discussion and expanded the conclusion into main contributions, key findings, and future work.

Version 1.3

- Revised the pipe-node volumes using 21 m supply and return pipe sections, giving a total modelled pipe length of 42 m.
- Added literature-supported justification for the pipe-length and pipe-diameter assumptions.
- Replaced the demand-following objective with a multi-objective custom cost containing temperature-preference, flow-penalty, producer-power-reserve, and move-suppression terms.
- Added explicit bounds on all temperature states and manipulated variables.
- Added a hard custom inequality enforcing producer power above demand by a minimum reserve.
- Updated the complete NMPC optimization problem and MATLAB implementation description.
- Revised the results discussion to reflect bounded coordinated flow, producer power above demand, and improved upstream-temperature regulation.
- Updated the conclusion to reflect the transition from baseline demand-following NMPC to a constrained multi-objective NMPC formulation.

Version 1.4

- Revised the physical interpretation of P_d as prescribed thermal power extracted from the network at the consumer node.
- Removed double counting of consumer heat extraction by setting $UA_3 = 0$ and $\kappa_3 = 0$.
- Retained the radiator water content for the consumer-node thermal volume, while removing the radiator heat-transfer loss term from the node-3 state equation.
- Replaced the previous 40–70 kW synthetic demand profile with a small-scale profile consisting of a 0.5 kW base load, 1.0 kW morning peak, and 1.5 kW evening peak.
- Revised the producer-power capacity from 80 kW to 5 kW.
- Removed the soft producer-power tracking term $P \approx P_d + \Delta P$ and replaced it with a producer-power-use penalty.
- Removed the hard custom inequality $P \geq P_d + \Delta P_{\text{min}}$.
- Revised the flow upper bound from 1 kg/s to 0.1 kg/s, with $q_{\text{scale}} = 0.05\,\text{kg/s}$.
- Revised the initial condition and tracking reference to

$$x(0) = T_{\text{ref}} = \begin{bmatrix} 80 & 80 & 70 & 65 \end{bmatrix}^\top .$$

- Separated temperature references from safety bounds using

$$T_{\text{max,safe}} = \begin{bmatrix} 90 & 90 & 75 & 75 \end{bmatrix}^\top .$$

- Updated the final cost weights to

$$\alpha_T = \begin{bmatrix} 100 & 120 & 100 & 5 \end{bmatrix}, \qquad \alpha_q = \begin{bmatrix} 0.02 & 0.02 & 0.02 & 0.02 \end{bmatrix}, \qquad \alpha_P = 0.3.$$

- Updated the results to show successful optimization status over the full simulation, realistic mass-flow levels, physically meaningful producer-power behaviour, and stable consumer-node temperature regulation near 70°C.

Contents

1 Introduction **1**

1.1 Background and motivation 1

1.2 System description 1

1.3 Control objective 2

1.4 Objectives of the study 3

1.5 Report organization 3

2 System Modelling **5**

2.1 General modelling philosophy 5

2.2 Node-wise differential equations 6

2.2.1 Node 1: producer node 6

2.2.2 Node 2: supply pipe section 6

2.2.3 Node 3: consumer node 7

2.2.4 Node 4: return pipe section 7

2.3 Matrix form of the model 7

2.4 Interpretation of the derivative terms 8

2.5 Physical parameterization 9

3 NMPC Formulation **13**

3.1 Nonlinear model predictive control concept 13

3.2 Prediction model and controller settings 13

3.3 Objective function 14

3.4 Constraints 15

3.4.1 Equality constraints 15

3.4.2 State and input bounds 16

3.5 Complete NMPC problem statement 16

3.6 MATLAB implementation 17

3.7 Discussion of the chosen formulation 18

4 Simulation Setup **19**

4.1 Closed-loop Simulink implementation 19

4.2 Synthetic heat-demand disturbance profile 20

4.3 Plant subsystem implementation 21

4.4 Initial conditions and reference vector 21

4.5 Controller bounds and scaling 22

4.6 Optimization and solver configuration 22

5 Results and Discussion **23**

5.1 Overview of closed-loop evaluation 23

5.2 Optimization status 25

5.3 Flow-rate trajectories 25

5.4 Producer power and demand response 26

5.5 Temperature trajectories 27

5.6 Discussion 28

6 Conclusion **30**

6.1 Main contributions 30

6.2 Key findings 30

6.3 Limitations 31

6.4 Future work 31

Bibliography **33**

List of Figures

2.1 Schematic representation of the four-node district heating network model showing the producer, supply pipe, consumer, and return pipe nodes. . . 6

4.1 Overall Simulink implementation of the four-node DHN with nonlinear model predictive controller, synthetic demand disturbance generation, and continuous-time plant subsystem. 19

4.2 Synthetic 24-hour heat-demand disturbance profile used in the final closed-loop simulation. 20

4.3 Plant subsystem used in Simulink. The MATLAB Function block evaluates the right-hand side of the continuous-time state equations, and the integrator block generates the state vector by integrating the temperature derivative. 21

5.1 Combined closed-loop response of the final DHN NMPC formulation, showing producer power and heat demand, nodal temperature trajectories, and manipulated mass-flow rates. 24

5.2 Optimization status during the 24-hour closed-loop simulation. 25

5.3 Manipulated flow rates in the district heating network. 26

5.4 Producer heat input P and heat-demand disturbance P_d over the 24-hour simulation. 27

5.5 Nodal temperature trajectories over the 24-hour closed-loop simulation. . 28

List of Tables

2.1 State, manipulated-variable, and disturbance definitions used in the DHN model. 10

2.2 Physical properties, nominal density values, nodal volumes, and ambient temperatures used in the DHN model. 11

2.3 Computed nodal water masses used in the DHN model. 11

2.4 Overall heat-transfer conductances used in the DHN model. 12

2.5 Thermal-loss coefficients used in the DHN state equations. 12

3.1 Key NMPC tuning settings used in the simulation. 14

4.1 Final controller bounds and scaling values used in the closed-loop simulation. 22

Chapter 1

Introduction

1.1 Background and motivation

District heating networks (DHNs) transport thermal energy from one or more heat producers to distributed consumers through a hydraulic and thermal circulation loop [3, 4]. Because water transport, thermal inertia, heat demand, and environmental heat losses interact dynamically, DHNs are naturally multivariable, constrained, and affected by time-varying disturbances. These features make model predictive control particularly attractive, since it can explicitly account for plant dynamics, future demand variations, and physical operating limits [4, 5, 6].

In this work, a reduced-order but physically interpretable district heating network is considered. The objective is not to reproduce a full urban district heating network with many consumers, substations, and distributed pipe-delay effects. Instead, the aim is to construct a compact nonlinear closed-loop benchmark that captures the essential thermal mechanisms required for nonlinear model predictive control design. The model contains four lumped thermal states and is implemented in MATLAB/Simulink using a continuous-time plant model inside a nonlinear model predictive control (NMPC) framework.

Compared with the previous formulation, the present version uses a physically consistent small-scale heat-demand profile and removes the double counting of consumer heat extraction. The consumer heat demand $P_d(t)$ is interpreted as prescribed thermal power removed from the network at the consumer node. Therefore, the demand disturbance represents the useful heat extracted from the network, while the producer heat input $P(t)$ remains a manipulated variable selected by the NMPC.

1.2 System description

The considered district heating network consists of four thermal nodes arranged in a ring:

- Node 1: producer-side heat exchanger [1], where external heat input is injected into the circulating water,
- Node 2: supply-pipe section,

- Node 3: consumer node, where the prescribed heat-demand disturbance is extracted,
- Node 4: return-pipe section returning the fluid back to the producer.

The thermal state vector is defined as

$$x(t) = \begin{bmatrix} T_1(t) & T_2(t) & T_3(t) & T_4(t) \end{bmatrix}^\top, \tag{1.1}$$

where each state represents the average water temperature in degrees Celsius at one node. The final simulation uses the initial condition

$$x(0) = \begin{bmatrix} 80 & 80 & 70 & 65 \end{bmatrix}^\top. \tag{1.2}$$

This operating point represents a small high-temperature hydronic heating loop with a hot producer and supply side, a consumer-node temperature of approximately 70°C, and a lower return-pipe temperature. These levels remain consistent with conventional high-temperature radiator-heating operation, while the return temperature is treated as an outcome of heat extraction and return-side heat loss rather than as a tightly enforced output [7].

The manipulated variables of the controller are

$$u(t) = \begin{bmatrix} q_{12}(t) & q_{23}(t) & q_{34}(t) & q_{41}(t) & P(t) \end{bmatrix}^\top, \tag{1.3}$$

where q_{ij} denotes the mass flow rate from node i to node j, and P denotes the producer heat input. The measured disturbance is the consumer heat demand $P_d(t)$, which enters the model at node 3 as a thermal sink. The full input vector supplied to the plant model is

$$\tilde{u}(t) = \begin{bmatrix} q_{12}(t) & q_{23}(t) & q_{34}(t) & q_{41}(t) & P(t) & P_d(t) \end{bmatrix}^\top. \tag{1.4}$$

A key modelling convention in the present version is that $P_d(t)$ already represents the useful heat removed by the consumer. Therefore, the consumer-node radiator heat-transfer term is not included as an additional heat-loss term. The radiator water content is still used to define the consumer-node thermal volume, but the heat removal itself is represented by the disturbance term $-P_d/c_p$.

1.3 Control objective

The NMPC controller is designed to regulate the thermal behaviour of the network under a time-varying heat-demand disturbance. In the final formulation, the controller does not force the producer power to track P_d plus a fixed reserve margin. Instead, producer power

is selected by the optimizer according to temperature tracking, flow economy, producer-power economy, and smooth control movement.

The final temperature reference used in the custom objective is

$$T_{\mathrm{ref}} = \begin{bmatrix} 80 & 80 & 70 & 65 \end{bmatrix}^{\top} \ ^{\circ}\mathrm{C}. \tag{1.5}$$

The controller gives stronger priority to the producer, supply, and consumer temperatures, while the return-pipe temperature is assigned a smaller tracking weight. The final implementation uses a producer-power upper bound of 5 kW and a flow-rate upper bound of 0.1 kg/s for each pipe segment.

1.4 Objectives of the study

The main objectives of the study are:

1. Formulate a compact dynamic model of a four-node district heating network using physically meaningful nodal energy balances,
2. Represent the consumer heat demand as prescribed thermal-power extraction at the consumer node,
3. Avoid double counting of the consumer load by separating the demand disturbance from ordinary ambient heat-loss terms,
4. Embed the nonlinear plant model inside a MATLAB/Simulink nonlinear MPC framework,
5. Define a custom NMPC objective based on temperature tracking, flow-use penalty, producer-power-use penalty, and move suppression,
6. Simulate the closed-loop response under a realistic small-scale daily heat-demand profile,
7. Evaluate the resulting temperature, flow, producer-power, and solver-status trajectories.

1.5 Report organization

Chapter 1 introduces the system, the modelling interpretation of the demand disturbance, and the control objective. Chapter 2 presents the system model and physical parameterization. Chapter 3 formulates the nonlinear MPC problem. Chapter 4 describes the

simulation setup. Chapter 5 presents and discusses the closed-loop simulation results. Chapter 6 summarizes the main findings and conclusions.

Chapter 2

System Modelling

2.1 General modelling philosophy

The four-node DHN model is based on a lumped-parameter thermal representation. Each node is treated as a well-mixed control volume with one representative temperature. This assumption preserves the dominant thermal-storage and transport mechanisms while keeping the state dimension small enough for nonlinear model predictive control implementation.

Starting from the energy balance written in enthalpy form for node i,

$$m_i c_p \dot{T}_i = \sum \dot{m}_{in} c_p T_{in} - \sum \dot{m}_{out} c_p T_i - UA_i(T_i - T_{a,i}) + Q_i, \tag{2.1}$$

where Q_i denotes an external heat injection or extraction at node i. Dividing by c_p gives

$$m_i \dot{T}_i = \sum \dot{m}_{in} T_{in} - \sum \dot{m}_{out} T_i - \frac{UA_i}{c_p}(T_i - T_{a,i}) + \frac{Q_i}{c_p}. \tag{2.2}$$

The auxiliary heat-loss coefficient is defined as

$$\kappa_i := \frac{UA_i}{c_p}. \tag{2.3}$$

The temperature-coordinate model is therefore

$$m_i \dot{T}_i = \sum \dot{m}_{in} T_{in} - \sum \dot{m}_{out} T_i - \kappa_i(T_i - T_{a,i}) + \frac{Q_i}{c_p}. \tag{2.4}$$

In the final formulation, the consumer-node conductance is set to

$$UA_3 = 0, \qquad \kappa_3 = 0. \tag{2.5}$$

This is because $P_d(t)$ already represents the useful thermal power extracted by the consumer. The radiator water content is still used to define the consumer-node thermal volume, but the heat removed by the consumer is represented only by the disturbance term $-P_d/c_p$.

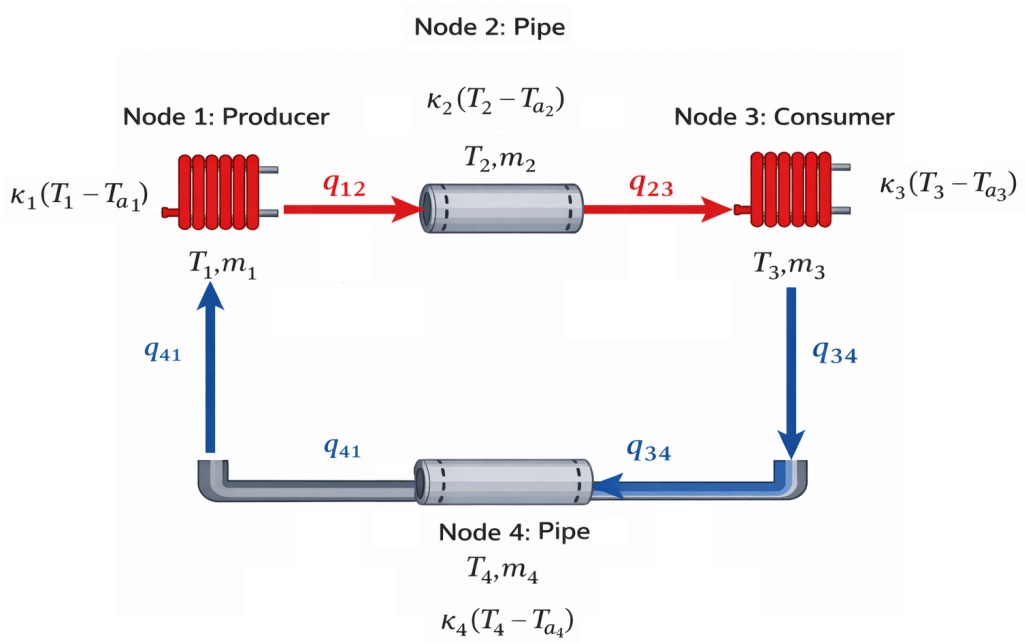

Figure 2.1: Schematic representation of the four-node district heating network model showing the producer, supply pipe, consumer, and return pipe nodes.

2.2 Node-wise differential equations

The network topology forms a ring with the directed flow sequence

$$1 \to 2 \to 3 \to 4 \to 1. \tag{2.6}$$

2.2.1 Node 1: producer node

At node 1, fluid enters from node 4 through q_{41}, exits toward node 2 through q_{12}, and receives the producer heat input P:

$$m_1 \dot{T}_1 = q_{41} T_4 - q_{12} T_1 - \kappa_1 T_1 + \kappa_1 T_{a,1} + \frac{P}{c_p}. \tag{2.7}$$

2.2.2 Node 2: supply pipe section

Node 2 receives water from node 1 and loses heat to the surrounding environment through the insulated pipe wall:

$$m_2 \dot{T}_2 = q_{12} T_1 - q_{23} T_2 - \kappa_2 T_2 + \kappa_2 T_{a,2}. \tag{2.8}$$

2.2.3 Node 3: consumer node

At node 3, the prescribed heat demand P_d is extracted from the network:

$$m_3\dot{T}_3 = q_{23}T_2 - q_{34}T_3 - \frac{P_d}{c_p}. \tag{2.9}$$

The negative sign indicates that P_d removes heat from the circulating water.

2.2.4 Node 4: return pipe section

The return pipe receives water from the consumer node and returns it to the producer:

$$m_4\dot{T}_4 = q_{34}T_3 - q_{41}T_4 - \kappa_4 T_4 + \kappa_4 T_{a,4}. \tag{2.10}$$

2.3 Matrix form of the model

The state vector and thermal mass matrix are

$$x(t) = \begin{bmatrix} T_1(t) \\ T_2(t) \\ T_3(t) \\ T_4(t) \end{bmatrix}, \qquad M = \mathrm{diag}(m_1, m_2, m_3, m_4). \tag{2.11}$$

The stacked model is

$$M\dot{x}(t) = L(q)x(t) + BP(t) + d(P_d(t), T_a). \tag{2.12}$$

The state-coupling matrix is

$$L(q) = \begin{bmatrix} -q_{12} - \kappa_1 & 0 & 0 & q_{41} \\ q_{12} & -q_{23} - \kappa_2 & 0 & 0 \\ 0 & q_{23} & -q_{34} & 0 \\ 0 & 0 & q_{34} & -q_{41} - \kappa_4 \end{bmatrix}. \tag{2.13}$$

Equivalently,

$$L(q) = \begin{bmatrix} -q_{12} & 0 & 0 & q_{41} \\ q_{12} & -q_{23} & 0 & 0 \\ 0 & q_{23} & -q_{34} & 0 \\ 0 & 0 & q_{34} & -q_{41} \end{bmatrix} - \mathrm{diag}(\kappa_1, \kappa_2, 0, \kappa_4). \tag{2.14}$$

The input and disturbance distribution vectors are

$$B = \frac{1}{c_p}\begin{bmatrix}1\\0\\0\\0\end{bmatrix}, \qquad B_d = \frac{1}{c_p}\begin{bmatrix}0\\0\\1\\0\end{bmatrix}. \tag{2.15}$$

The disturbance and ambient-offset vector is

$$d(P_d, T_a) = -B_d P_d + \begin{bmatrix}\kappa_1 T_{a,1}\\ \kappa_2 T_{a,2}\\ 0\\ \kappa_4 T_{a,4}\end{bmatrix}. \tag{2.16}$$

Premultiplying Equation (2.12) by M^{-1} gives

$$\dot{x}(t) = M^{-1}\left(L(q)x(t) + BP(t) + d(P_d(t), T_a)\right). \tag{2.17}$$

The model is nonlinear because $L(q)$ depends on the manipulated flow rates. The NMPC output equation is

$$y(t) = x(t). \tag{2.18}$$

2.4 Interpretation of the derivative terms

The derivative expression combines convective transport, ambient heat exchange, and external heat injection or extraction. Terms of the form $q_{ji}T_j$ represent convective inflow, while terms of the form $-q_{ij}T_i$ represent convective outflow.

The ambient heat-exchange terms are written as

$$-\kappa_i(T_i - T_{a,i}). \tag{2.19}$$

These are included for the producer, supply-pipe, and return-pipe nodes. For the consumer node, this term is zero because consumer heat extraction is represented directly by P_d.

The terms P/c_p and $-P_d/c_p$ represent the producer thermal source and consumer thermal sink, respectively. The producer power is a manipulated variable, whereas the demand is treated as a measured disturbance.

2.5 Physical parameterization

Water is assumed to have a constant specific heat capacity of

$$c_p = 4180 \text{ J/(kg K)}. \tag{2.20}$$

The producer-side volume is parameterized using the selected SWEP B25T brazed plate heat exchanger [1]. The consumer-node volume is parameterized using the water content of the selected Stelrad radiator [2]. In the final formulation, the radiator is used only to define the consumer-node water volume.

The pipe volumes are computed from

$$V_{\text{pipe}} = \frac{\pi D_{\text{in}}^2}{4} L, \tag{2.21}$$

where $D_{\text{in}} = 12\,\text{mm}$ and $L = 21\,\text{m}$ for each pipe node.

For the producer node, the overall heat-transfer coefficient is estimated from

$$U = \frac{1}{t_{\text{ins}}/\lambda_{\text{ins}} + 1/h_{\text{out}}}, \tag{2.22}$$

and UA_1 is obtained from the approximated external surface area. For the pipe sections, radial heat loss is described using

$$R'_{\text{tot}} = \frac{\ln(r_2/r_1)}{2\pi\lambda_{\text{ins}}} + \frac{1}{h_o\, 2\pi r_2}, \tag{2.23}$$

with

$$UA_{\text{pipe}} = \frac{L}{R'_{\text{tot}}}. \tag{2.24}$$

Table 2.1: State, manipulated-variable, and disturbance definitions used in the DHN model.

Symbol	Meaning	Unit	Role in model
T_1	Producer node temperature	°C	State
T_2	Supply pipe temperature	°C	State
T_3	Consumer node temperature	°C	State
T_4	Return pipe temperature	°C	State
q_{12}	Flow from node 1 to node 2	kg/s	Manipulated variable
q_{23}	Flow from node 2 to node 3	kg/s	Manipulated variable
q_{34}	Flow from node 3 to node 4	kg/s	Manipulated variable
q_{41}	Flow from node 4 to node 1	kg/s	Manipulated variable
P	Producer thermal power input	W	Manipulated variable
P_d	Consumer thermal demand extracted at node 3	W	Measured disturbance
$T_{a,i}$	Ambient temperature around node i	°C	Environmental parameter

Table 2.2: Physical properties, nominal density values, nodal volumes, and ambient temperatures used in the DHN model.

Parameter	Symbol	Value	Description
Specific heat capacity of water	c_p	4180 J/(kg K)	Constant value used for all nodes
Water density, node 1	ρ_1	971.79 kg/m^3	Density at 80°C
Water density, node 2	ρ_2	971.79 kg/m^3	Density at 80°C
Water density, node 3	ρ_3	977.76 kg/m^3	Density at 70°C
Water density, node 4	ρ_4	980.55 kg/m^3	Density at 65°C
Producer node volume	V_1	7.66×10^{-3} m^3	Based on the selected SWEP B25T heat exchanger
Pipe volumes	$V_2 = V_4$	2.38×10^{-3} m^3	Computed for $D_{\text{in}} = 12$ mm and $L = 21$ m
Consumer node volume	V_3	6.60×10^{-3} m^3	Based on selected Stelrad radiator water content
Ambient temperatures	T_a	$[10, 10, 20, 10]^\top$ °C	$T_{a,3}$ is inactive because $\kappa_3 = 0$

The pipe-node volumes represent 21 m supply and return pipe sections, giving a total modelled pipe length of 42 m. This total length is consistent with the order of magnitude reported for a small residential radiator-heating system [15]. The assumed internal diameter of 12 mm is representative of small domestic hydronic pipework and is close to the internal bore associated with common nominal 15 mm heating tube [16, 17].

The density values are selected according to the nominal temperature level assigned to each node. Although the hydraulically connected loop has the same mass flow rate throughout, water density is temperature-dependent; using node-specific density values is therefore more physically representative than assigning one constant density to all nodes [8, 9, 4, 18, 19].

The thermal mass matrix is defined by

$$M = \operatorname{diag}(m_1, m_2, m_3, m_4), \qquad m_i = \rho_i V_i. \tag{2.25}$$

Table 2.3: Computed nodal water masses used in the DHN model.

Parameter	Density ρ_i	Volume V_i	Mass m_i
m_1	971.79 kg/m^3	7.66×10^{-3} m^3	7.44 kg
m_2	971.79 kg/m^3	2.38×10^{-3} m^3	2.31 kg
m_3	977.76 kg/m^3	6.60×10^{-3} m^3	6.45 kg
m_4	980.55 kg/m^3	2.38×10^{-3} m^3	2.33 kg

Table 2.4: Overall heat-transfer conductances used in the DHN model.

Parameter	Symbol	Value	Description
Producer-node conductance	UA_1	0.77 W/K	Insulated heat-exchanger body
Supply-pipe conductance	UA_2	3.35 W/K	One insulated 21 m pipe section
Consumer-node conductance	UA_3	0 W/K	Set to zero because P_d represents consumer heat extraction
Return-pipe conductance	UA_4	3.35 W/K	One insulated 21 m pipe section

Table 2.5: Thermal-loss coefficients used in the DHN state equations.

Parameter	Symbol	Value	Description
Producer-node coefficient	κ_1	1.84×10^{-4} kg/s	UA_1/c_p
Supply-pipe coefficient	κ_2	8.02×10^{-4} kg/s	UA_2/c_p
Consumer-node coefficient	κ_3	0 kg/s	Demand is represented by P_d
Return-pipe coefficient	κ_4	8.02×10^{-4} kg/s	UA_4/c_p

The conductances UA_i quantify the strength of heat exchange per unit temperature difference. For nodes 1, 2, and 4, the corresponding heat-loss terms describe dissipation from the producer body and insulated pipes. For node 3, the useful consumer heat extraction is imposed directly through P_d, giving a clear separation between distribution losses and prescribed heat demand.

Chapter 3

NMPC Formulation

3.1 Nonlinear model predictive control concept

Nonlinear model predictive control (NMPC) is a receding-horizon control strategy in which a finite-horizon constrained optimization problem is solved repeatedly. At each sampling instant, the current plant state is used as the initial condition of the prediction model. The optimizer computes a future sequence of control moves, but only the first move is applied to the plant. At the next sampling instant, the measured state is updated, the horizon is shifted forward, and the optimization problem is solved again [10, 11, 12].

This framework is suitable for district heating networks because such systems contain thermal inertia, time-varying heat demand, coupled hydraulic and thermal dynamics, and physical operating constraints. NMPC can include these effects directly in the online optimization problem and can therefore balance thermal performance, actuator usage, and operational limits [3, 5, 6].

3.2 Prediction model and controller settings

The prediction model used by the controller is the nonlinear continuous-time thermal model derived in Chapter 2. The state vector, manipulated-variable vector, and measured disturbance are

$$x(t) = \begin{bmatrix} T_1(t) & T_2(t) & T_3(t) & T_4(t) \end{bmatrix}^\top, \tag{3.1}$$

$$u(t) = \begin{bmatrix} q_{12}(t) & q_{23}(t) & q_{34}(t) & q_{41}(t) & P(t) \end{bmatrix}^\top, \qquad d(t) = P_d(t). \tag{3.2}$$

The prediction model is written as

$$\dot{x}(t) = f(x(t), u(t), d(t)), \qquad y(t) = x(t). \tag{3.3}$$

Although the plant model is supplied to the controller in continuous-time form, the NMPC problem is solved at discrete sampling instants. The internal discrete-time prediction mapping is

$$x_{k+1} = F_d(x_k, u_k, d_k), \tag{3.4}$$

where $F_d(\cdot)$ is obtained internally from the continuous-time state equations over one

sampling interval [13, 14].

Table 3.1: Key NMPC tuning settings used in the simulation.

Setting	Value	Interpretation
Sample time	60 s	Controller update interval
Prediction horizon	10 steps	Future prediction window of 10 min
Control horizon	5 steps	Number of free optimized control moves
States	4	T_1, T_2, T_3, T_4
Outputs	4	All states are measured outputs
Manipulated variables	5	$q_{12}, q_{23}, q_{34}, q_{41}, P$
Measured disturbance	1	P_d
Solver	`fmincon` with SQP	Nonlinear constrained optimization
Maximum iterations	50	Per sampling instant
Optimality tolerance	10^{-3}	Stopping criterion
Step tolerance	10^{-6}	Step-size stopping criterion
Suboptimal solution	Enabled	Allows closed-loop execution with a feasible suboptimal solution

3.3 Objective function

The final controller uses a custom objective function containing temperature tracking, flow-use penalty, producer-power-use penalty, and manipulated-variable move suppression. Unlike the previous reserve-tracking formulation, the producer power is not forced to follow $P_d + \Delta P$. Instead, P is selected according to the thermal state of the network and the penalty on producer-power usage.

Let

$$x_k = \begin{bmatrix} T_{1,k} & T_{2,k} & T_{3,k} & T_{4,k} \end{bmatrix}^\top, \qquad u_k = \begin{bmatrix} q_{12,k} & q_{23,k} & q_{34,k} & q_{41,k} & P_k \end{bmatrix}^\top. \tag{3.5}$$

The reference and scaling vectors are

$$T_{\text{ref}} = \begin{bmatrix} 80 & 80 & 70 & 65 \end{bmatrix}^\top \text{°C}, \qquad T_{\text{scale}} = \begin{bmatrix} 90 & 90 & 75 & 75 \end{bmatrix}^\top \text{°C}, \tag{3.6}$$

and

$$q_{\text{scale}} = \begin{bmatrix} 0.05 & 0.05 & 0.05 & 0.05 \end{bmatrix}^\top \text{kg/s}, \qquad P_{\max} = 5 \times 10^3 \text{ W}. \tag{3.7}$$

The stage cost is

$$\ell_k = \sum_{i=1}^{4} \alpha_{T_i} \left(\frac{T_{i,k} - T_{\mathrm{ref},i}}{T_{\mathrm{scale},i}} \right)^2 + \sum_{j=1}^{4} \alpha_{q_j} \left(\frac{q_{j,k}}{q_{\mathrm{scale},j}} \right)^2 + \alpha_P \left(\frac{P_k}{P_{\max}} \right)^2 . \tag{3.8}$$

The move-suppression term is

$$J_{\Delta u} = \sum_{k=0}^{N_p-2} \sum_{r=1}^{5} \alpha_{\Delta u,r} \left(\frac{\Delta u_{r,k}}{u_{\mathrm{scale},r}} \right)^2 , \qquad \Delta u_{r,k} = u_{r,k+1} - u_{r,k}, \tag{3.9}$$

with

$$u_{\mathrm{scale}} = \begin{bmatrix} 0.05 & 0.05 & 0.05 & 0.05 & 5000 \end{bmatrix}^\top . \tag{3.10}$$

The total cost is

$$J = \sum_{k=0}^{N_p-1} \ell_k + J_{\Delta u}. \tag{3.11}$$

The final weight values are

$$\alpha_T = \begin{bmatrix} 100 & 120 & 100 & 5 \end{bmatrix}, \qquad \alpha_q = \begin{bmatrix} 0.02 & 0.02 & 0.02 & 0.02 \end{bmatrix}, \qquad \alpha_P = 0.3, \tag{3.12}$$

and

$$\alpha_{\Delta u} = \begin{bmatrix} 0.05 & 0.05 & 0.05 & 0.05 & 0.2 \end{bmatrix}. \tag{3.13}$$

The selected temperature weights prioritize the producer, supply, and consumer-node temperatures. The return-pipe temperature is assigned a smaller weight because it is mainly an outcome of heat extraction and return-side losses.

3.4 Constraints

The NMPC problem includes equality constraints on the loop flows and direct box bounds on the states and manipulated variables. The custom producer-power inequality used in the previous formulation is not included.

3.4.1 Equality constraints

A single-loop circulation structure is enforced through

$$q_{12} = q_{23} = q_{34} = q_{41}, \tag{3.14}$$

or equivalently

$$c_{eq} = \begin{bmatrix} q_{12} - q_{23} \\ q_{23} - q_{34} \\ q_{34} - q_{41} \end{bmatrix} = 0. \tag{3.15}$$

3.4.2 State and input bounds

The temperature references are separated from the admissible safety bounds:

$$0 \leq T_{1,k} \leq 90, \qquad 0 \leq T_{2,k} \leq 90, \qquad 0 \leq T_{3,k} \leq 75, \qquad 0 \leq T_{4,k} \leq 75. \tag{3.16}$$

The flow and producer-power bounds are

$$10^{-3} \leq q_{ij,k} \leq 0.1 \text{ kg/s}, \qquad 0 \leq P_k \leq 5 \times 10^3 \text{ W}. \tag{3.17}$$

3.5 Complete NMPC problem statement

Combining the nonlinear prediction model, objective, equality constraints, and box bounds, the optimal control problem solved at each sampling instant is

$$\begin{aligned} \min_{\{u_k\}_{k=0}^{N_c-1}} \quad & \sum_{k=0}^{N_p-1} \left[\sum_{i=1}^{4} \alpha_{T_i} \left(\frac{T_{i,k} - T_{\text{ref},i}}{T_{\text{scale},i}} \right)^2 + \sum_{j=1}^{4} \alpha_{q_j} \left(\frac{q_{j,k}}{q_{\text{scale},j}} \right)^2 + \alpha_P \left(\frac{P_k}{P_{\max}} \right)^2 \right] \\ & + \sum_{k=0}^{N_p-2} \sum_{r=1}^{5} \alpha_{\Delta u,r} \left(\frac{\Delta u_{r,k}}{u_{\text{scale},r}} \right)^2 \end{aligned} \tag{3.18}$$

subject to

$$x_{k+1} = F_d(x_k, u_k, d_k), \tag{3.19}$$
$$q_{12,k} - q_{23,k} = 0, \tag{3.20}$$
$$q_{23,k} - q_{34,k} = 0, \tag{3.21}$$
$$q_{34,k} - q_{41,k} = 0, \tag{3.22}$$
$$0 \le T_{1,k} \le 90, \tag{3.23}$$
$$0 \le T_{2,k} \le 90, \tag{3.24}$$
$$0 \le T_{3,k} \le 75, \tag{3.25}$$
$$0 \le T_{4,k} \le 75, \tag{3.26}$$
$$10^{-3} \le q_{12,k} \le 0.1, \tag{3.27}$$
$$10^{-3} \le q_{23,k} \le 0.1, \tag{3.28}$$
$$10^{-3} \le q_{34,k} \le 0.1, \tag{3.29}$$
$$10^{-3} \le q_{41,k} \le 0.1, \tag{3.30}$$
$$0 \le P_k \le 5 \times 10^3. \tag{3.31}$$

3.6 MATLAB implementation

The NMPC formulation is implemented in MATLAB using the `nlmpc` object, which supports nonlinear prediction models, custom objectives, and nonlinear constraints [13, 14]. The controller dimensions are

$$n_x = 4, \qquad n_y = 4, \qquad n_{mv} = 5, \qquad n_{md} = 1. \tag{3.32}$$

The total input vector supplied internally to the plant model is

$$\tilde{u}(t) = \begin{bmatrix} q_{12}(t) & q_{23}(t) & q_{34}(t) & q_{41}(t) & P(t) & P_d(t) \end{bmatrix}^\top. \tag{3.33}$$

The state-function callback separates this vector into the flow rates, producer power, and measured disturbance before evaluating the continuous-time plant model. The output function returns the state vector directly.

The standard built-in tracking cost is replaced by the custom objective described in this chapter, and the custom equality constraint imposes the common loop-flow condition. The previous custom inequality constraint is not assigned because the hard producer-power reserve condition has been removed.

The state and input bounds are assigned directly to the controller object. The temperature states are bounded between 0°C and $[90, 90, 75, 75]^\top$ °C. Each flow variable is

bounded between 10^{-3} and $0.1\,\mathrm{kg/s}$, with a flow scale of $0.05\,\mathrm{kg/s}$. The producer heat input is bounded between 0 and $5 \times 10^3\,\mathrm{W}$, which is also used as the producer-power scale.

The nonlinear programming problem is solved using `fmincon` with the sequential quadratic programming algorithm. The maximum iteration count, optimality tolerance, and step tolerance are specified explicitly. The use of suboptimal feasible solutions is enabled to support closed-loop execution if an individual optimization step terminates before full convergence.

3.7 Discussion of the chosen formulation

The final formulation is a temperature-tracking NMPC with flow and producer-power economy. Since P_d already represents thermal power extracted at the consumer node, the producer power is not forced to equal P_d plus an arbitrary offset. Instead, P is optimized according to the thermal state of the network, the disturbance level, and the penalty on unnecessary heat input.

The formulation also separates desired temperatures from hard safety limits. The reference vector defines the desired operating behaviour in the cost function, while the larger state bounds define the admissible operating region. The return temperature is assigned a small tracking weight because it is influenced by heat extraction and return-pipe losses.

Chapter 4

Simulation Setup

4.1 Closed-loop Simulink implementation

The closed-loop simulation is implemented in MATLAB/Simulink by connecting the NMPC controller from Chapter 3 with the continuous-time plant model from Chapter 2. The overall Simulink signal flow is shown in Figure 4.1.

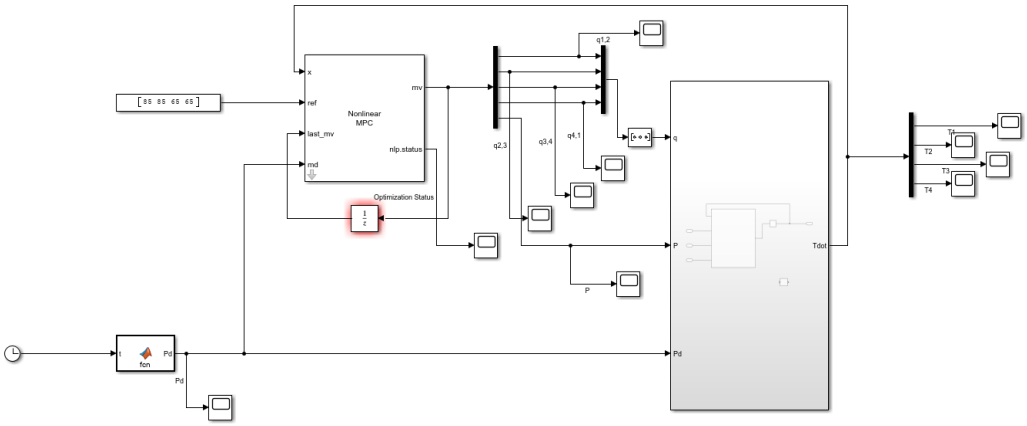

Figure 4.1: Overall Simulink implementation of the four-node DHN with nonlinear model predictive controller, synthetic demand disturbance generation, and continuous-time plant subsystem.

At each control update, the NMPC block receives the measured temperature vector, the reference vector, the previous manipulated variables, and the current value of P_d. It then computes the four loop flow rates and the producer heat input. These manipulated variables are applied to the plant subsystem, and the resulting temperature states are fed back to the controller.

The simulation is performed over a 24-hour interval,

$$0 \leq t \leq 86400 \text{ s}. \tag{4.1}$$

4.2 Synthetic heat-demand disturbance profile

The heat-demand disturbance $P_d(t)$ is generated synthetically in the MATLAB function file `Pd_24h.m`. The disturbance is constructed as a constant base load with two Gaussian-shaped peaks:

$$P_d(t) = P_{\text{base}} + A_{\text{m}} \exp\left[-\frac{1}{2}\left(\frac{\tau - t_{\text{m}}}{w_{\text{m}}}\right)^2\right] + A_{\text{e}} \exp\left[-\frac{1}{2}\left(\frac{\tau - t_{\text{e}}}{w_{\text{e}}}\right)^2\right], \tag{4.2}$$

where

$$\tau = \text{mod}(t, 86400). \tag{4.3}$$

The final parameter values are

$$P_{\text{base}} = 0.5 \text{ kW}, \tag{4.4}$$

$$A_{\text{m}} = 1.0 \text{ kW}, \qquad t_{\text{m}} = 7.5 \text{ h}, \qquad w_{\text{m}} = 1.2 \text{ h}, \tag{4.5}$$

$$A_{\text{e}} = 1.5 \text{ kW}, \qquad t_{\text{e}} = 19.0 \text{ h}, \qquad w_{\text{e}} = 1.8 \text{ h}. \tag{4.6}$$

The resulting profile has a low base demand, a moderate morning peak, and a larger evening peak. For numerical implementation, the profile is sampled on a uniform 60 s grid, matching the controller sample time. Between grid points, the disturbance is applied using zero-order-hold interpolation. The profile is plotted in kW for readability, while the MATLAB/Simulink implementation uses W.

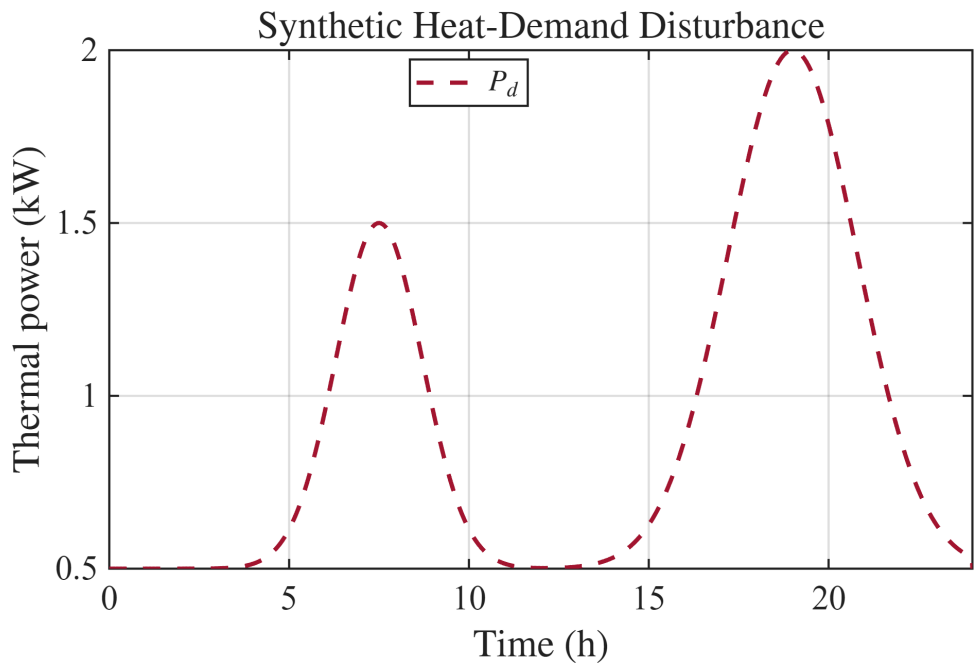

Figure 4.2: Synthetic 24-hour heat-demand disturbance profile used in the final closed-loop simulation.

4.3 Plant subsystem implementation

The plant subsystem is shown in Figure 4.3. It implements the continuous-time state model derived in Chapter 2. The MATLAB Function block evaluates the temperature derivatives, and the integrator block generates the state trajectory.

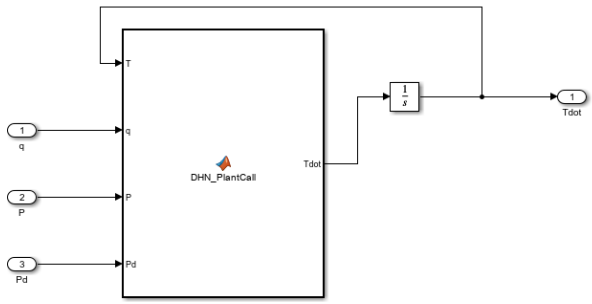

Figure 4.3: Plant subsystem used in Simulink. The MATLAB Function block evaluates the right-hand side of the continuous-time state equations, and the integrator block generates the state vector by integrating the temperature derivative.

The subsystem receives the four manipulated flow rates, the producer heat input, and the heat-demand disturbance. The output of the subsystem is the temperature state vector, which is returned to the controller and logged for post-processing.

4.4 Initial conditions and reference vector

The final simulation is initialized from

$$x(0) = \begin{bmatrix} 80 & 80 & 70 & 65 \end{bmatrix}^\top \ ^\circ\mathrm{C}. \tag{4.7}$$

The same vector is supplied as the nominal temperature reference:

$$y_{\mathrm{ref}} = \begin{bmatrix} 80 & 80 & 70 & 65 \end{bmatrix}^\top \ ^\circ\mathrm{C}. \tag{4.8}$$

The initial manipulated-variable vector is

$$u(0) = \begin{bmatrix} 0.05 & 0.05 & 0.05 & 0.05 & 1.0 \times 10^3 \end{bmatrix}^\top, \tag{4.9}$$

where the first four entries are mass-flow rates in kg/s, and the last entry is the producer heat input in W. The initial disturbance value is obtained from `Pd_24h(0)`.

4.5 Controller bounds and scaling

The controller uses the bounds and scaling factors defined in Chapter 3. For clarity, the final numerical values used in the simulation are summarized in Table 4.1.

Table 4.1: Final controller bounds and scaling values used in the closed-loop simulation.

Quantity	Value	Interpretation
Temperature upper bounds	$[90, 90, 75, 75]^\top$ °C	Safety limits for T_1, T_2, T_3, T_4
Temperature lower bounds	0°C for all states	Lower admissible state limit
Flow lower bound	10^{-3} kg/s	Positive circulation limit
Flow upper bound	0.1 kg/s	Maximum allowed flow in each loop segment
Flow scale factor	0.05 kg/s	Normalization value for flow variables
Producer-power bound	$0 \leq P \leq 5 \times 10^3$ W	Admissible producer heat input
Producer-power scale factor	5×10^3 W	Normalization value for producer power

4.6 Optimization and solver configuration

At each sampling instant, the NMPC block solves the nonlinear optimization problem formulated in Chapter 3. The controller is configured with

$$T_s = 60 \text{ s}, \qquad N_p = 10, \qquad N_c = 5. \tag{4.10}$$

The nonlinear program is solved using `fmincon` with the sequential quadratic programming algorithm. The solver display is disabled, the maximum number of iterations is set to 50, the optimality tolerance is set to 10^{-3}, and the step tolerance is set to 10^{-6}. The use of suboptimal feasible solutions is enabled. The optimization status is logged during simulation and evaluated in Chapter 5.

Chapter 5

Results and Discussion

5.1 Overview of closed-loop evaluation

This chapter presents the closed-loop simulation results of the final NMPC formulation over a 24-hour horizon. The evaluation considers the applied heat-demand disturbance, optimization status, flow-rate trajectories, producer-power response, and nodal temperature evolution.

The main closed-loop response is summarized in Figure 5.1, which combines producer power, heat demand, nodal temperatures, and mass-flow trajectories.

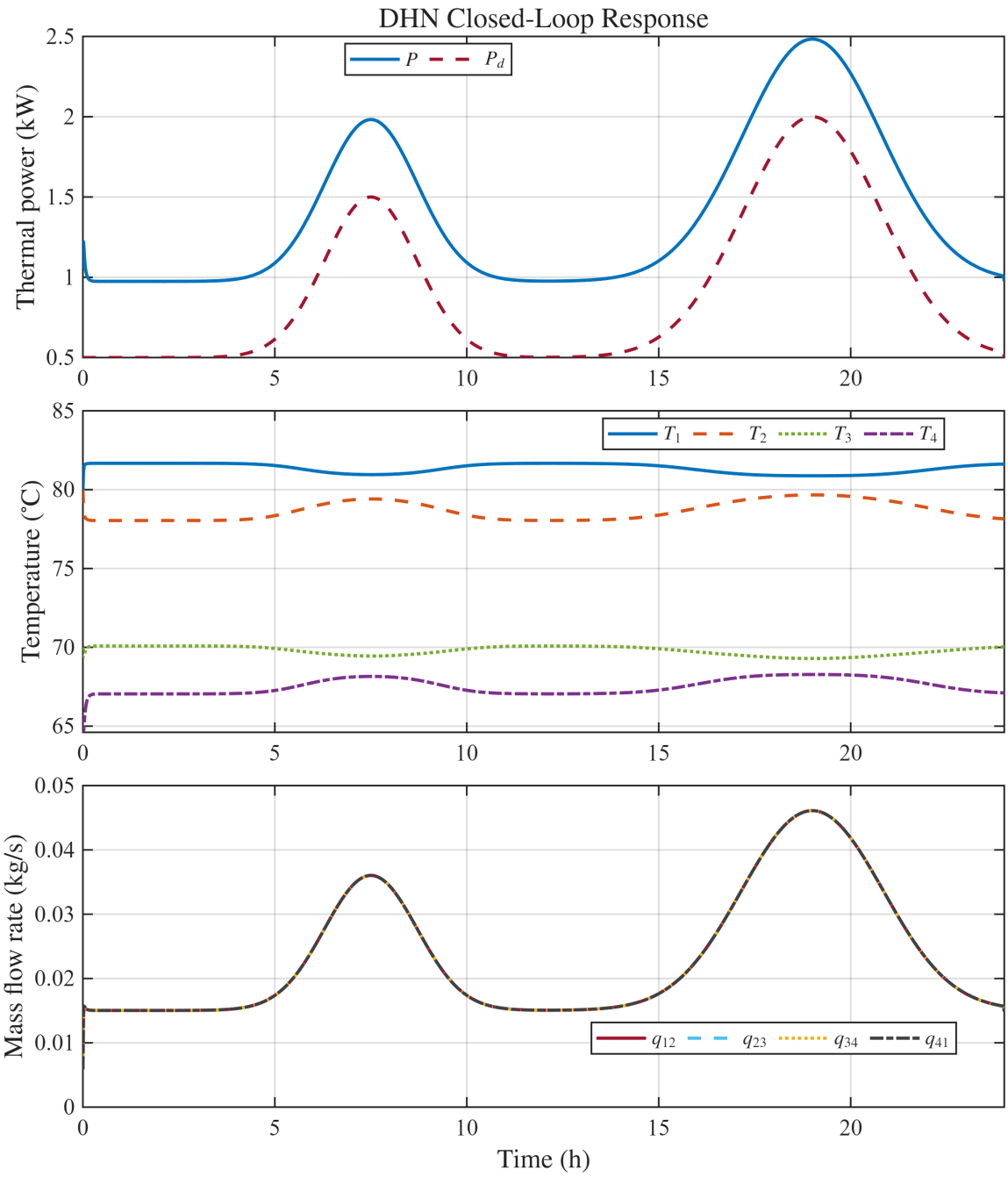

Figure 5.1: Combined closed-loop response of the final DHN NMPC formulation, showing producer power and heat demand, nodal temperature trajectories, and manipulated mass-flow rates.

The combined response shows that the controller increases both producer power and circulation flow during the morning and evening demand peaks. At the same time, the nodal temperatures remain within a narrow operating band, and the consumer-node temperature stays close to its reference value.

5.2 Optimization status

Figure 5.2 shows the optimization status reported by the Simulink NMPC block.

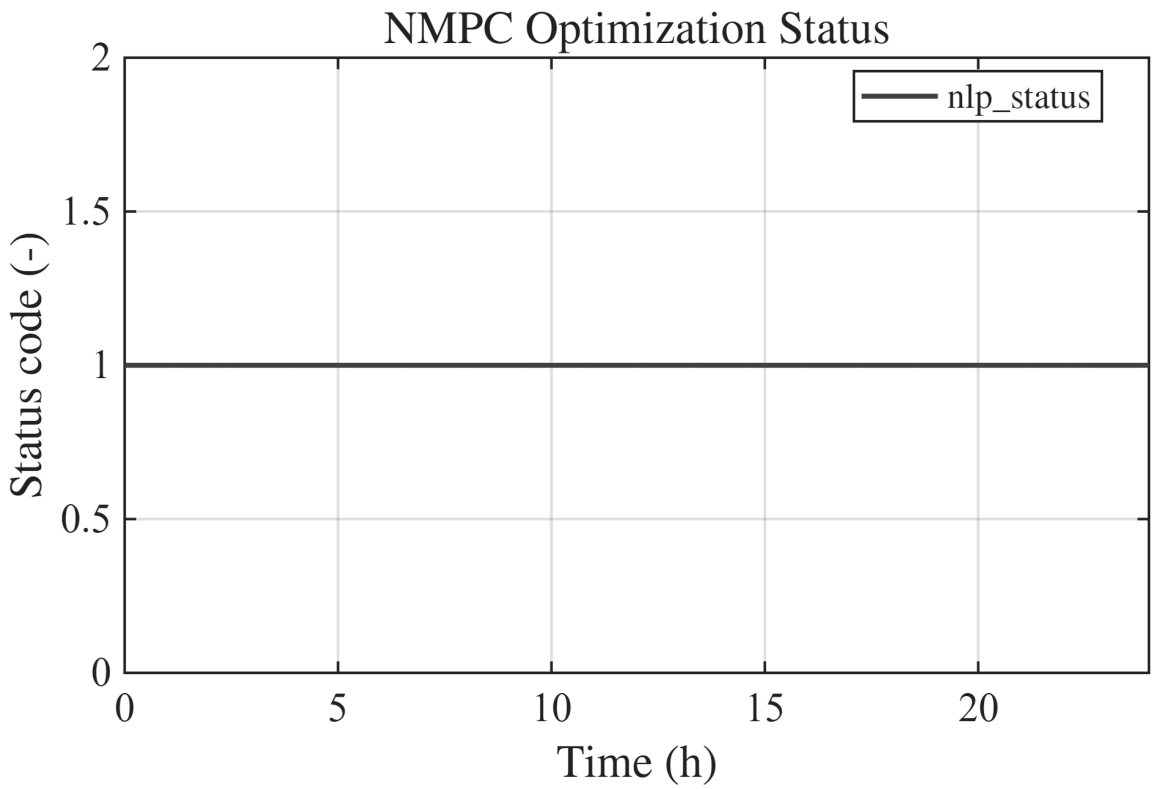

Figure 5.2: Optimization status during the 24-hour closed-loop simulation.

The optimization status remains equal to 1 throughout the complete simulation. This indicates successful solution of the nonlinear optimization problem at every control update and confirms the improved numerical reliability of the final formulation.

5.3 Flow-rate trajectories

The four manipulated flow trajectories are plotted in Figure 5.3.

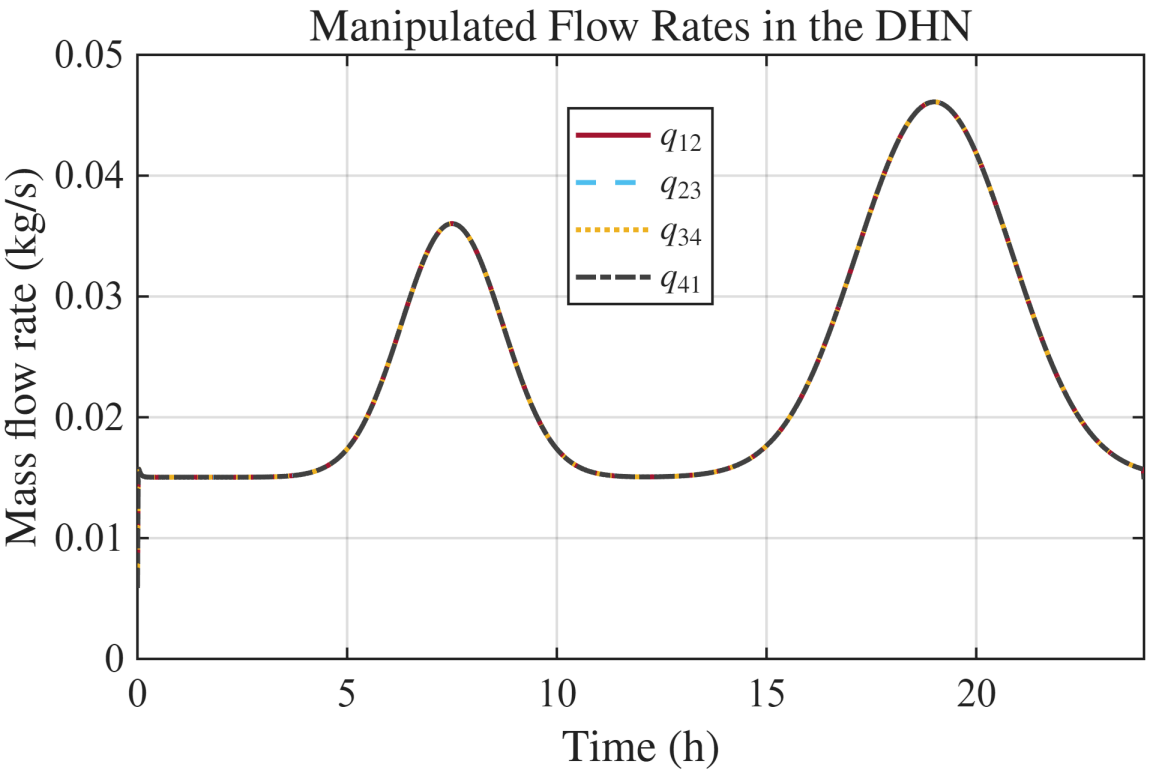

Figure 5.3: Manipulated flow rates in the district heating network.

All four flow signals are visually identical because the equality constraints impose

$$q_{12} = q_{23} = q_{34} = q_{41}. \tag{5.1}$$

The common circulation rate remains positive and well below the upper bound of 0.1 kg/s. It is approximately 0.015 kg/s during low-demand periods, increases during the morning peak, and reaches approximately 0.046 kg/s during the evening peak.

This response is physically meaningful: when heat extraction increases, the controller increases circulation to transport more thermal energy from the producer side to the consumer side. The final flow levels are consistent with the assumed 12 mm internal pipe diameter and do not rely on unrealistic hydraulic action.

5.4 Producer power and demand response

The producer heat input and heat-demand disturbance are shown in Figure 5.4.

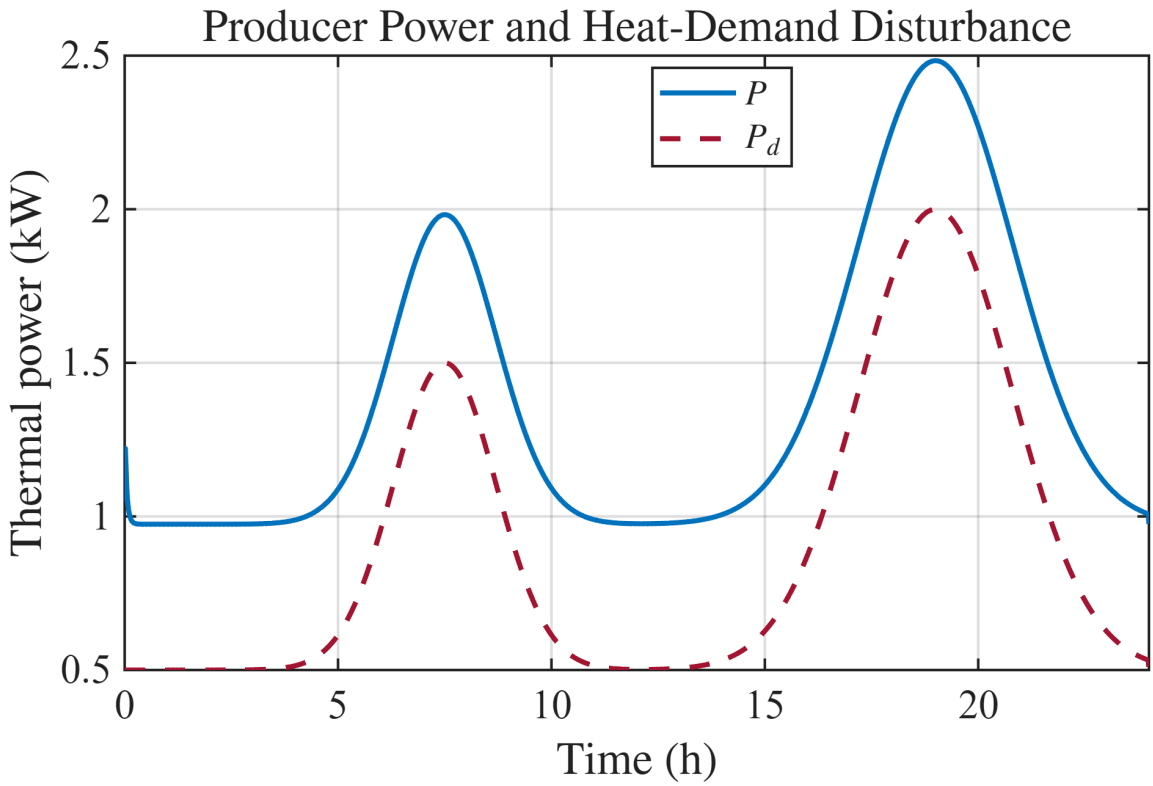

Figure 5.4: Producer heat input P and heat-demand disturbance P_d over the 24-hour simulation.

The producer power follows the general shape of the heat-demand disturbance. It increases during both demand peaks and decreases again during lower-demand periods. Since the final formulation does not impose fixed reserve tracking, this response emerges from the temperature objective and producer-power penalty.

During low-demand periods, P_d is approximately 0.5 kW, while P is approximately 0.95 kW. Around the morning peak, P_d reaches approximately 1.5 kW, while P rises to approximately 2.0 kW. Around the evening peak, P_d reaches approximately 2.0 kW, while P reaches approximately 2.5 kW. This difference is physically reasonable because the producer must also compensate distribution losses and maintain stored thermal energy.

5.5 Temperature trajectories

The nodal temperature trajectories are shown in Figure 5.5.

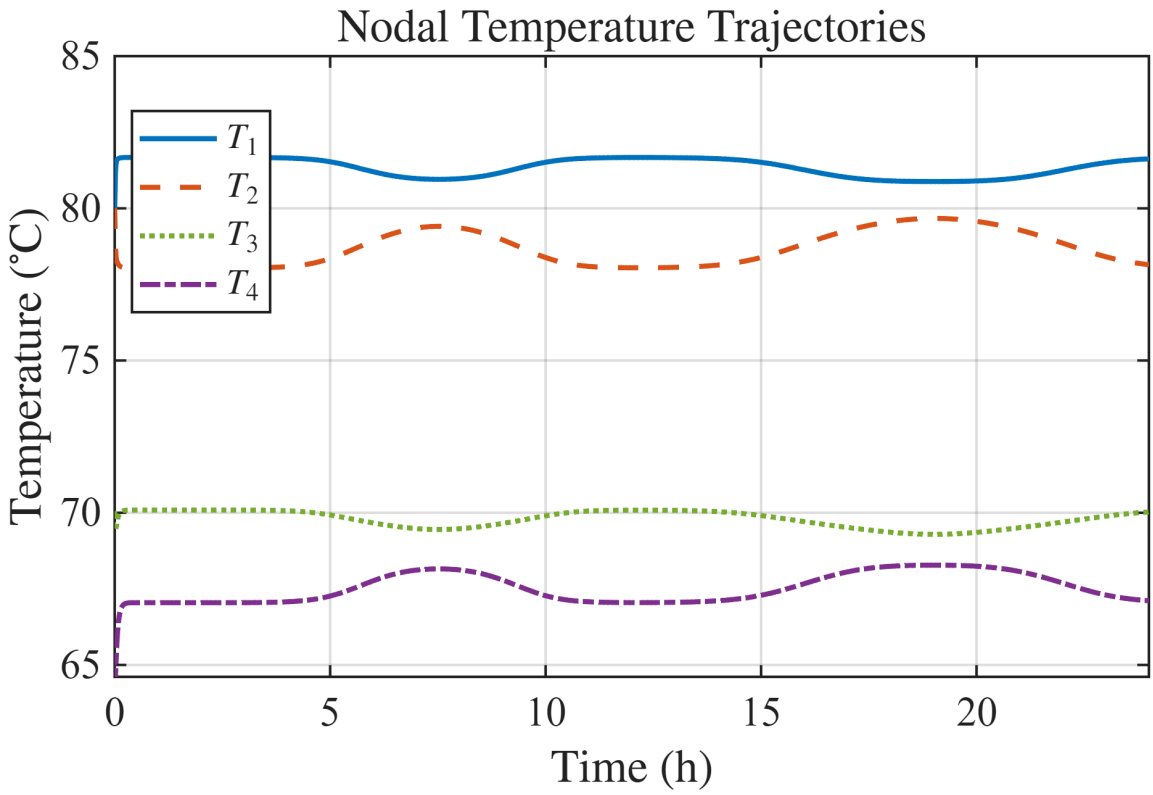

Figure 5.5: Nodal temperature trajectories over the 24-hour closed-loop simulation.

The producer-node temperature T_1 remains slightly above 80°C, generally around 81–82°C. This is acceptable because the temperature reference and safety upper bound are separated in the final formulation. The supply-pipe temperature T_2 remains close to 78–80°C.

The consumer-node temperature T_3 remains very close to 70°C, with only small deviations during demand peaks. This is the main thermal-regulation improvement of the final controller. The return-pipe temperature T_4 remains lower than T_3, generally around 67–68°C, which is physically reasonable because it is affected by consumer heat extraction and return-pipe losses.

Overall, the temperature response demonstrates stable thermal operation throughout the daily demand cycle. No state approaches an unsafe bound.

5.6 Discussion

The final closed-loop results show improved physical consistency and numerical reliability. The heat-demand profile is scaled to the size of the model, consumer heat extraction is represented only once through P_d, and the controller uses realistic flow and producer-power bounds.

The flow response confirms that the hydraulic part of the controller is well behaved. The

common flow increases during demand peaks and remains below 0.1 kg/s. The producer-power response is also physically meaningful: P increases when demand increases, but it is not constrained to follow P_d with a fixed artificial offset.

The temperature trajectories provide the strongest evidence that the final formulation is effective. The producer, supply, and consumer-node temperatures remain close to their desired levels, and T_3 stays close to 70°C during both demand peaks. The successful solver status throughout the full simulation confirms that the final NMPC problem is numerically reliable for the selected model, bounds, and disturbance profile.

The remaining limitation is that the four-node model is still a lumped reduced-order representation. Real district heating pipes exhibit distributed transport delay, spatial temperature gradients, pressure losses, and more complex hydraulic effects. Nevertheless, for a compact nonlinear MPC benchmark, the final model and controller provide coherent, stable, and interpretable closed-loop behaviour.

Chapter 6

Conclusion

6.1 Main contributions

This report developed and implemented a nonlinear model predictive control framework for a simplified four-node district heating network in MATLAB/Simulink. A control-oriented thermal model was formulated from nodal energy balances and expressed in nonlinear state-space form.

The final version corrects the physical interpretation of the consumer heat-demand disturbance. The disturbance P_d is treated as prescribed thermal power extracted from the network at the consumer node. Consequently, consumer heat removal is represented directly by $-P_d/c_p$, while the additional radiator heat-transfer loss term at node 3 is removed.

The NMPC formulation was revised into a temperature-tracking structure with flow and producer-power economy. Instead of forcing the producer power to track P_d plus a fixed reserve margin, the final controller allows the producer heat input to be selected according to temperature regulation, flow-use penalty, producer-power-use penalty, and move suppression.

The physical scaling of the simulation was also corrected. The heat-demand profile was reduced to a small-scale range, the producer-power bound was revised to 5 kW, and the flow upper bound was revised to 0.1 kg/s.

6.2 Key findings

The final closed-loop results show physically consistent and numerically reliable behaviour over the full 24-hour simulation horizon. The optimization-status signal remains equal to 1, indicating successful solution of the nonlinear optimization problem at every control update.

The producer-power trajectory follows the general shape of the demand disturbance but is not forced to follow it with a fixed artificial margin. Instead, the optimized producer power remains moderately above P_d because the plant must compensate distribution losses and maintain the thermal energy stored in the network.

The manipulated flow trajectories also behave consistently. All four flow rates remain

identical due to the equality constraints, and the common flow increases during demand peaks while remaining below the imposed upper bound.

The temperature results provide the main validation of the final NMPC design. The producer, supply, and consumer-node temperatures remain close to their desired operating levels. In particular, T_3 stays close to 70°C throughout the daily demand cycle. The return temperature remains lower than T_3, which is physically reasonable because it is influenced by consumer heat extraction and return-pipe losses.

6.3 Limitations

Although the final formulation produces stable and physically meaningful results, the model remains a reduced-order approximation. Each node is represented as a well-mixed thermal volume, and the pipe sections are represented as lumped elements. Real district heating pipes exhibit spatial temperature gradients, transport delays, pressure losses, pump dynamics, and distributed heat-loss effects.

The hydraulic model is also simplified. The equality constraints enforce a common loop flow, but the model does not include pump curves, pressure-drop equations, valve characteristics, or detailed hydraulic network equations. The heat-demand disturbance is synthetic rather than measured and should be interpreted as a repeatable test signal rather than a measured load curve.

6.4 Future work

The developed framework provides a basis for further research on predictive control of district heating networks. Natural extensions include:

- replacing the four independent flow manipulated variables and equality constraints with a single common loop-flow input,
- incorporating a more detailed pipe model with transport delay or distributed thermal dynamics,
- adding hydraulic pressure-drop and pump-power relationships,
- testing the controller under measured or more realistic heat-demand profiles,
- performing systematic sensitivity analysis of temperature, flow, producer-power, and move-suppression weights,
- extending the four-node benchmark to larger networks with multiple consumers, branching topology, and multiple heat sources,

- investigating longer prediction horizons or disturbance preview to improve anticipatory control during demand peaks.

In conclusion, the final Version 1.4 formulation corrects the main physical and control-design inconsistencies of the previous version. The resulting closed-loop simulation demonstrates stable temperatures, coordinated flow response, physically meaningful producer-power behaviour, and successful optimization throughout the full 24-hour horizon.

Bibliography

[1] SWEP International AB, *B25T Brazed Plate Heat Exchanger Datasheet*. Available online: https://www.hosbv.com/data/specifications/300535_Swep.pdf

[2] Stelrad Radiators, *Stelrad Classic Compact Radiator Technical Specifications*. Available online: https://www.stelrad.com/wp-content/uploads/2022/04/28968_Stelrad-HS_Classic_Web.pdf

[3] D. Hering, M. E. Cansev, E. Tamassia, A. Xhonneux, and D. Müller, *Temperature control of a low-temperature district heating network with Model Predictive Control and Mixed-Integer Quadratically Constrained Programming*, Energy, vol. 224, Art. no. 120140, 2021. doi: https://doi.org/10.1016/j.energy.2021.120140

[4] B. van der Heijde, M. Fuchs, C. Ribas Tugores, G. Schweiger, K. Sartor, D. Basciotti, D. Müller, C. Nytsch-Geusen, M. Wetter, and L. Helsen, *Dynamic equation-based thermo-hydraulic pipe model for district heating and cooling systems*, Energy Conversion and Management, vol. 151, pp. 158–169, 2017. doi: https://doi.org/10.1016/j.enconman.2017.08.072

[5] D. Quaggiotto, J. Vivian, and A. Zarrella, *Management of a district heating network using model predictive control with and without thermal storage*, Optimization and Engineering, vol. 22, pp. 1897–1919, 2021. doi: https://doi.org/10.1007/s11081-021-09644-w

[6] J. Jansen, F. Jorissen, and L. Helsen, *Optimal control of a fourth generation district heating network using an integrated non-linear model predictive controller*, Applied Thermal Engineering, vol. 223, Art. no. 120030, 2023. doi: https://doi.org/10.1016/j.applthermaleng.2023.120030

[7] H. Zinko, B. Skagestad, P. Ommen, and S. Lauenburg, *Improvement of Operational Temperature Differences in District Heating Systems*, IEA District Heating and Cooling Programme, Annex VII, Final Report, 2005. Available online: https://www.iea-dhc.org/fileadmin/documents/Annex_VII/8dhc-05-03_oper-temp-diff-final-report-hz.pdf

[8] Internet Chemistry, *Water Density Table*. Available online: https://www.internetchemistry.com/chemical-data/water-density-table.php

[9] International Association for the Properties of Water and Steam, *R6-95(2018): Revised Release on the IAPWS Formulation 1995 for the Thermodynamic Properties of Ordinary Water Substance for General and Scientific Use*, 2018. Available online: https://iapws.org/documents/release/IAPWS-95

[10] D. Q. Mayne, J. B. Rawlings, C. V. Rao, and P. O. M. Scokaert, *Constrained model predictive control: Stability and optimality*, Automatica, vol. 36, no. 6, pp. 789–814, 2000. doi: https://doi.org/10.1016/S0005-1098(99)00214-9

[11] S. J. Qin and T. A. Badgwell, *A survey of industrial model predictive control technology*, Control Engineering Practice, vol. 11, no. 7, pp. 733–764, 2003. doi: https://doi.org/10.1016/S0967-0661(02)00186-7

[12] J. B. Rawlings, D. Q. Mayne, and M. M. Diehl, *Model Predictive Control: Theory, Computation, and Design*, 2nd ed., Nob Hill Publishing, Madison, WI, 2017.

[13] MathWorks, *nlmpc — Nonlinear model predictive controller*. Available online: https://www.mathworks.com/help/mpc/ref/nlmpc.html

[14] MathWorks, *Nonlinear MPC*. Available online: https://www.mathworks.com/help/mpc/ug/nonlinear-mpc.html

[15] A. Aacharya, R. Koirala, S. Khanal, and B. Baral, *Comparative analysis of radiant and radiator heating system for a residential building*, IOP Conference Series: Materials Science and Engineering, vol. 1279, no. 1, Art. no. 012001, 2023. doi: https://doi.org/10.1088/1757-899X/1279/1/012001

[16] Association of Plumbing and Heating Contractors, *Understanding Central Heating Systems*, 2013. Available online: https://www.aphc.co.uk/wp-content/uploads/2019/07/UNDERSTANDING-CENTRAL-HEATING-SYSTEMS-Dec13.pdf

[17] Yorkshire Copper Tube, *Technical Guide*, 2014. Available online: https://yorkshirecopper.com/wp-content/uploads/Technical-Guide-full-issue-02_14_Really2.pdf

[18] K. Hermansson and C. Kos, *Building and Simulating Dynamic Models of District Heating Networks with Modelica: Using Matlab to Process Data and Automate Modelling and Simulation*, Master Thesis, School of Business, Society and Engineering, 2017. Available online: https://www.diva-portal.org/smash/get/diva2:1124448/FULLTEXT01.pdf

[19] I. Gabrielaitiene, B. Sundén, and R. Kačianauskas, *Analysis of Fluid Flow and Heat Transfer in District Heating Pipelines Using the Finite Element Method*, in *Advanced Computational Methods in Heat Transfer VII*, WIT Press, pp. 13–22, 2002. Available online: https://www.witpress.com/Secure/elibrary/papers/HT02/HT02002FU.pdf